COMMENT:
ALL RIGHTS ARE RESERVED BY US FOR THIS DRAWING. WITHOUT OUR PRIOR CONSENT,
IT MAY NEITHER BE DUBLICATED NOR MADE AVAILABLE TO A THIRD PARTY,
AND IT ALSO MAY NOT BE IMPROPERLY USED BY TE RECEIVER, OR A THIRD PARTY.

| | Surface | Screw (quantity) | Washer (quantity) | Spring washer (quantity) | Nut (quantity) | Package | Notice |
|---|---|---|---|---|---|---|---|
| F-GSCH1/5-K130 | zinc plated 1) | 2 | 4 | 2 | 2 | in pairs | Packed together in a bag |
| F-GSCH1/5-K130SN | tin plated | 2 | 4 | 2 | 2 | in pairs | Packed together in a bag |
| F-GSCH1/5-K130S | zinc plated 1) | max. 5000 | max. 10000 | max. 5000 | max. 5000 | bulk packed | Individually packed in bags |
| F-GSCH1/5-K130SSN | tin plated | max. 5000 | max. 10000 | max. 5000 | max. 5000 | bulk packed | Individually packed in bags |
| F-GSCH1/5-K130N | zinc plated 1) | 2 | 4 | 2 | 2 | in pairs | Packed together in a bag without label |
| F-GSCH1/5-K1114 | tin plated | 1 | - | 1 | - | per 1pc. in a bag | Threaded insert (F52M122M900) included in delivery |

1) with tension control fluid

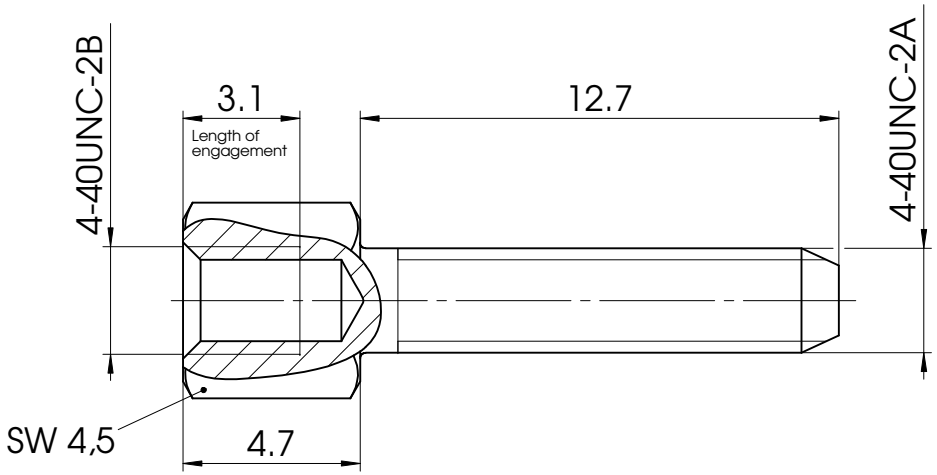


| | | | | | |
|---|---|---|---|---|---|
| | | | Measurement without tolerance occ. to ISO 2768-m | SCALE 5:1 | TITLE Female screw lock F-GSCH1/5 K130 4-40/4-40 |
| | | | | DATE | NAME |
| | | | DRAWN | 04-09-2002 | schref |
| | | | CHECKED | 05-09-2002 | Floßmann |
| | | | FCT group www.fctgroup.com | | DWG.NO. F62M036_D |
| 1 | | | | | REV. 1 |
| REV. | DATE | CH.-NO. | ORIGINAL: DIN A4-DRAWING AS A FILE | | REPLACEMENT FOR: |
| | | | | | PAGES 1 |